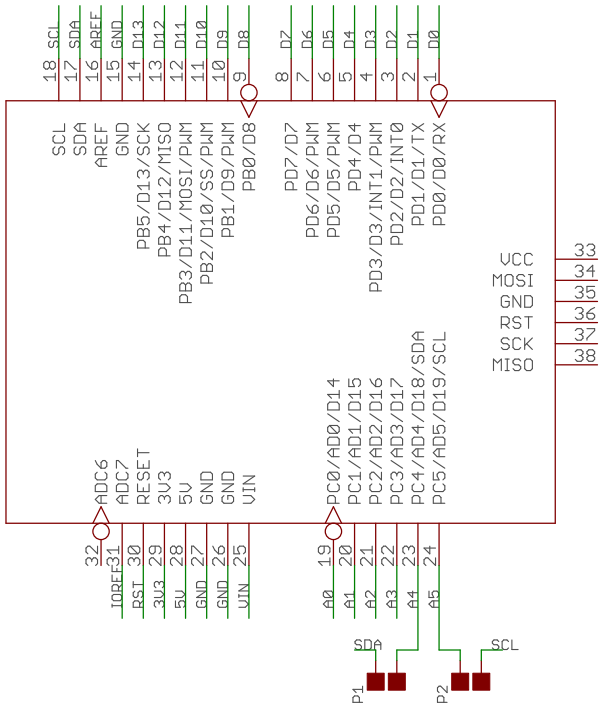

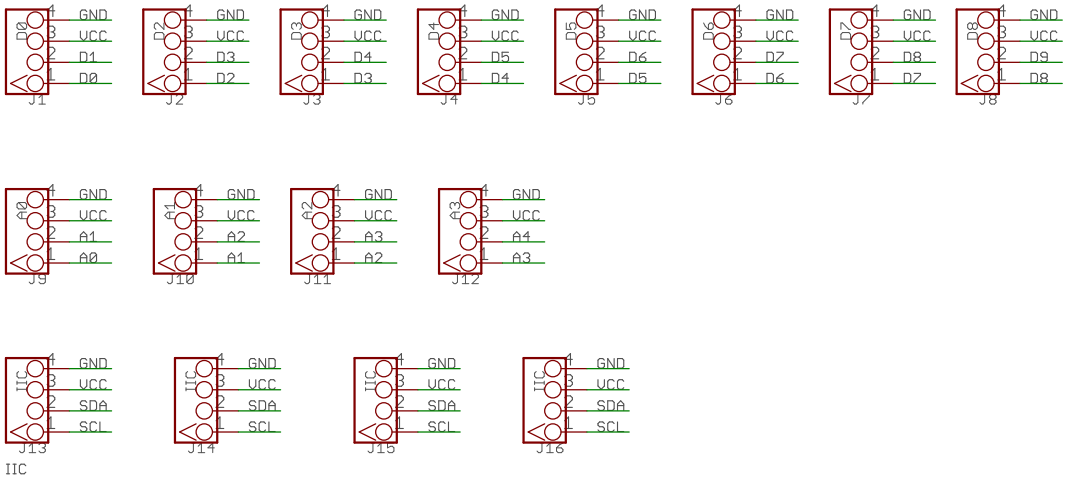

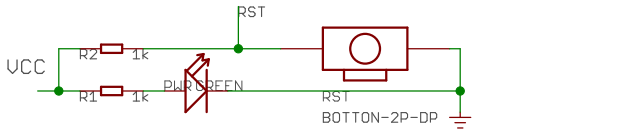

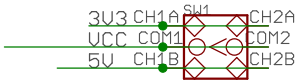

SeeedStudio

TITLE: Base Shield v2_SCH

Design:	Check:	
Date:	Vision:	Sheet: 1/1