BIGTREETECH

TMC2208-V3.0

Stepper motor driver

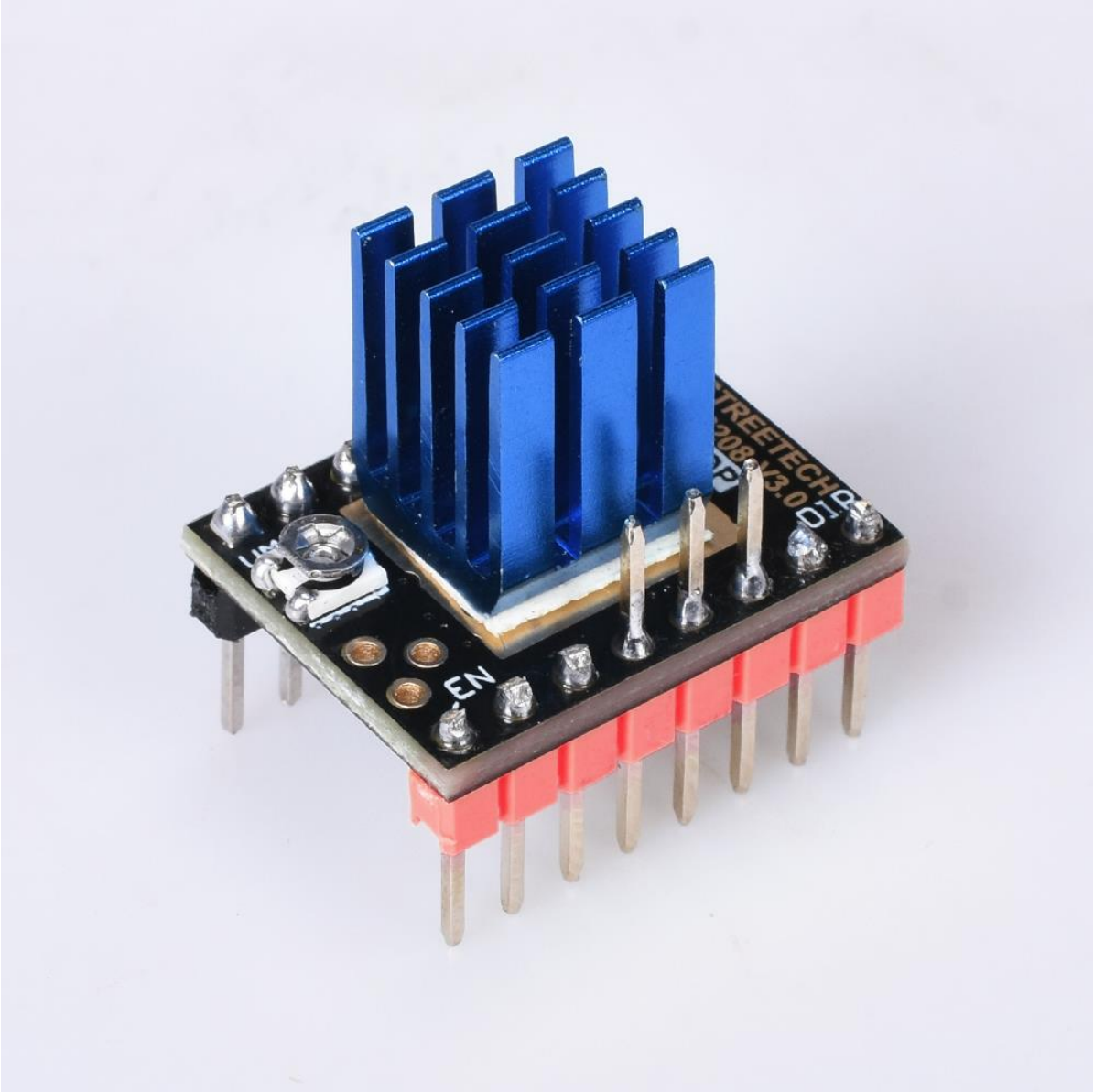

Parameter description

power tube built-in drive current 1.2A ,peak current 2A
256 microsteps per fullstep
interpolation from lower input resolutions
stealthChop2 - for quiet positioning
spreadCycle - for high speed and high dynamics
Low RDSon LS 280mΩ & HS 290mΩ (typ. at 25°C)
Voltage Range 12V/24VDC
Single Wire UART for advanced configuration options
Integrated Pulse Generator for standalone motion

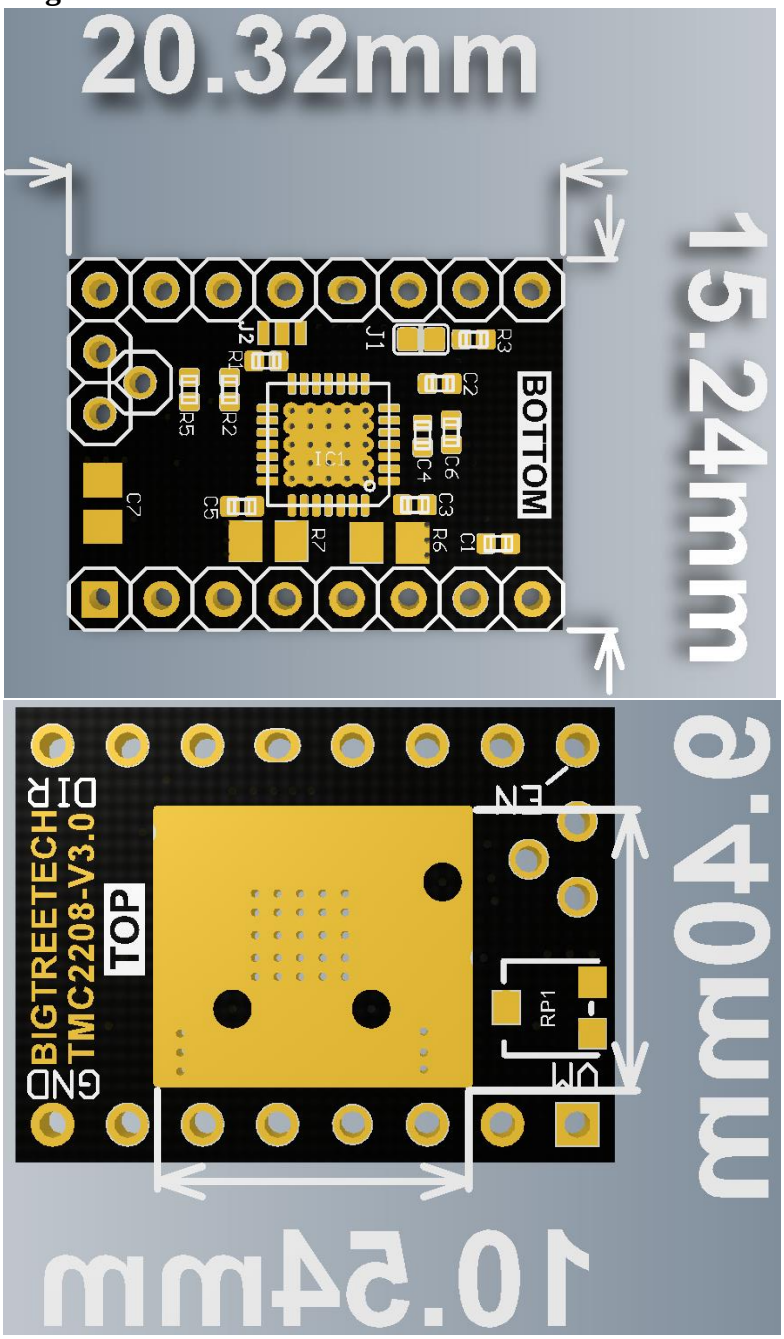

Working mode and potentiometer description

1. STEP/DIRmode：

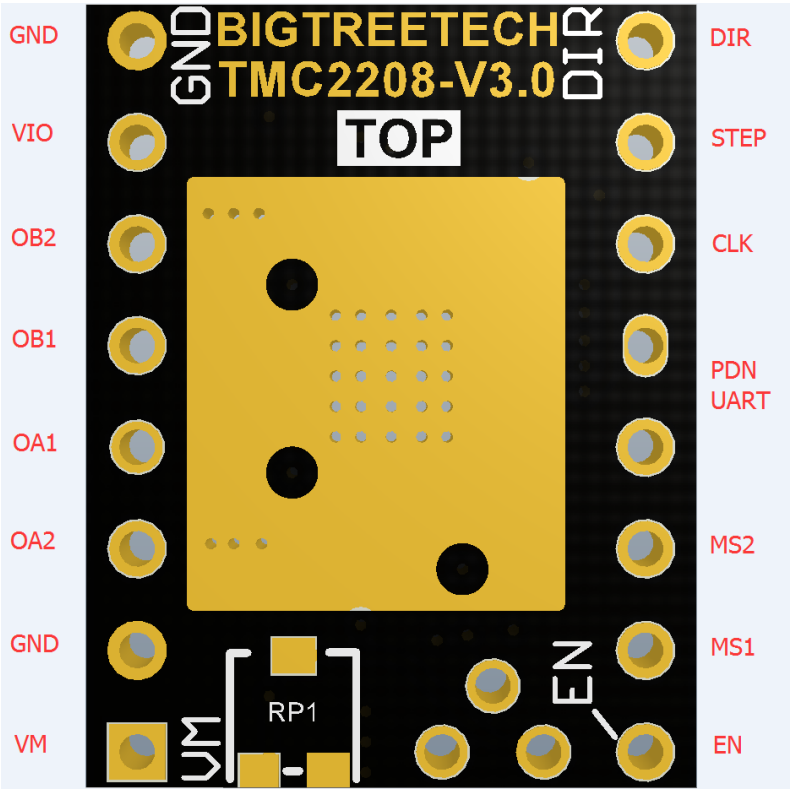

Choice of working mode：MS1、MS2：

MS1	MS2	Steps	Interpolation	ChopperMode
GND	GND	8	Yes to 256	stealthChop2
VIO	GND	2	Yes to 256	stealthChop2
GND	VIO	4	Yes to 256	stealthChop2
VIO	VIO	16	Yes to 256	stealthChop2

To access all other modes (eg spreadCycle) you have to use the UART interface.

Working Current Reference:

```
VRef 0...2.5V (0.11 Ohm  sense resistor)
>=2.50V    100% - 1.77A RMS
  1.25V     50% - 0.88A RMS
  0.50V     20% - 0.35A RMS

EN (with pull-up)
GND        driver enabled
VCC        driver disabled

PDN/UART (with pull-down)
GND        automatic standstill current reduction
VCC        automatic standstill power down disable
optional   UART interface

CLK (with pull-down)
GND        internal clock
optional   supply external clock
```

2.UART mode：

Note: TMC2208 v3.0 has two modes from our factory : step / dir and UART mode. Customers can choose according to your own needs.

The user who purchases the step / dir mode driver shall perform the following hardwa re operations on the driver module before wiring (the user who purchases the UART mode driver does not need any welding operations):

Weld J2 as shown in the purple area, and put the driver in UART mode.

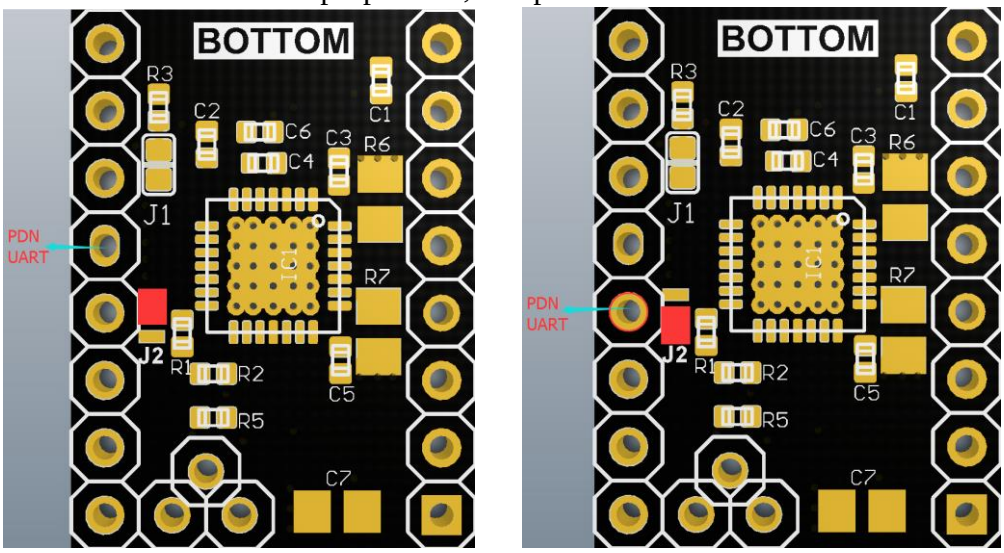

The benefits of UART mode:

1.Motor current can be set arbitrarily by firmware.
2.Micro-steps can be set arbitrarily by firmware (up to 256 actual micro-steps);
3.The actual and interpolated microsteps can be combined to achieve maximum torque.
4.Firmware can dynamically switch stepper motors between stealthChop2 and spreadCycle modes through UART.
5.When the motor is not moving, the standby current of the motor can be reduced dynamically (through UART).

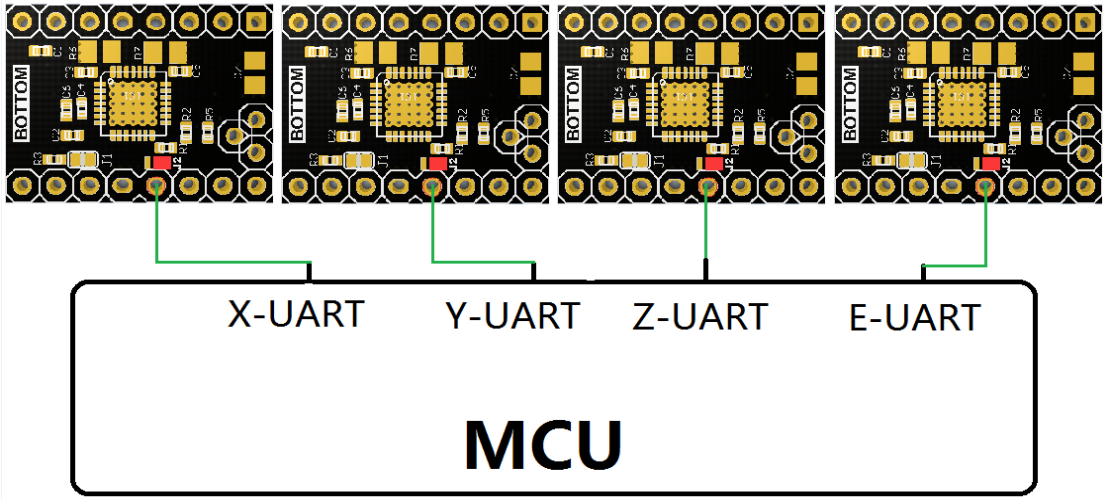

Potentiometer regulation instructions:

Clockwise Rotating Potentiometer - Reduces Vref, thereby reducing drive current;

Counterclockwise rotating potentiometer - Increase Vref, thereby increasing the driving current.

The accurate voltage of Vref can only be measured when the main board is supplied with 12V or 24V voltage.

The range of Vref value: default value: 1V (+0.2); MAX: 2V; MIN: 0V;

Rotating potentiometer must not use too much force to prevent irreversible damage to the potentiometer; when the counter-clockwise rotation reaches the maximum, if it continues to rotate, it will become the minimum; similarly, when the clockwise rotation reaches the minimum, if it continues to rotate, it will become the maximum

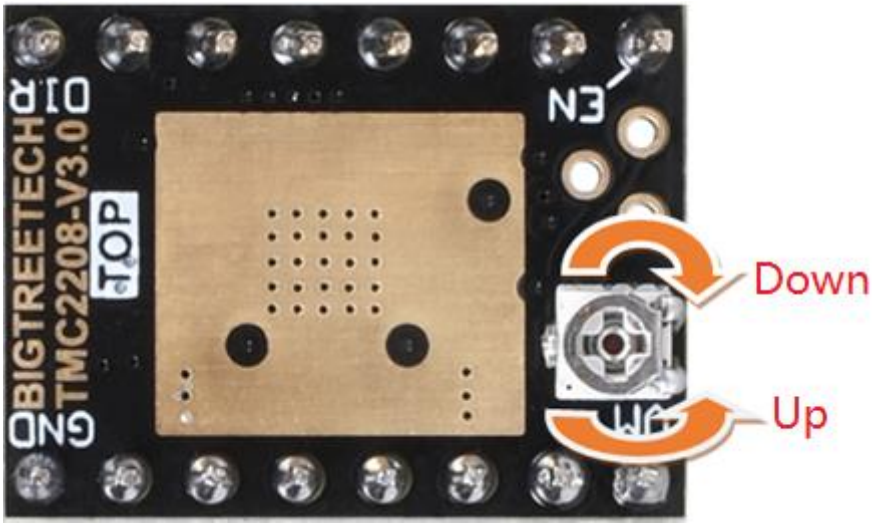

Firmware change instructions:

Firmware (marlin-bugfix-2.0)

BIGTREETECH SKR V1.3 as example：

Configuration.h files

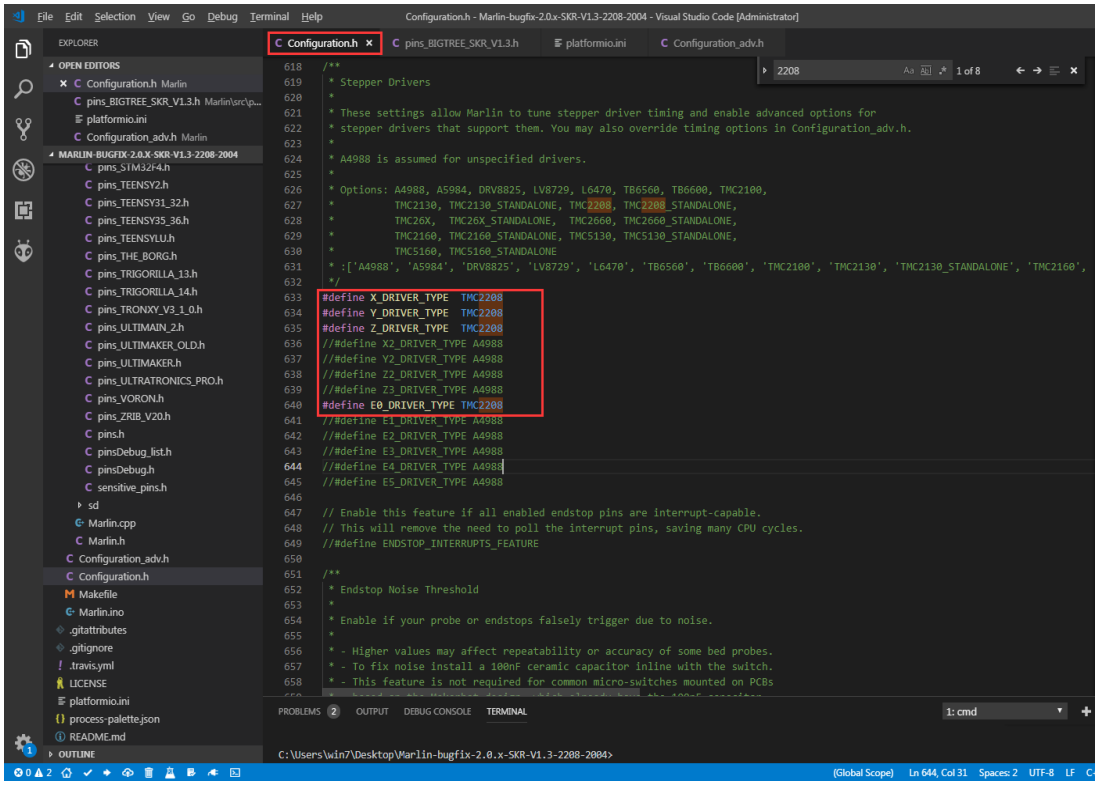

TMC2208 - means you want to control SilentStepStick through UART.

TMC2208_STANDALONE - does not use UART control but

STEP/DIR .

TMC2208 SilentStepStick， In other words plug and play.

Configuration_adv.h files

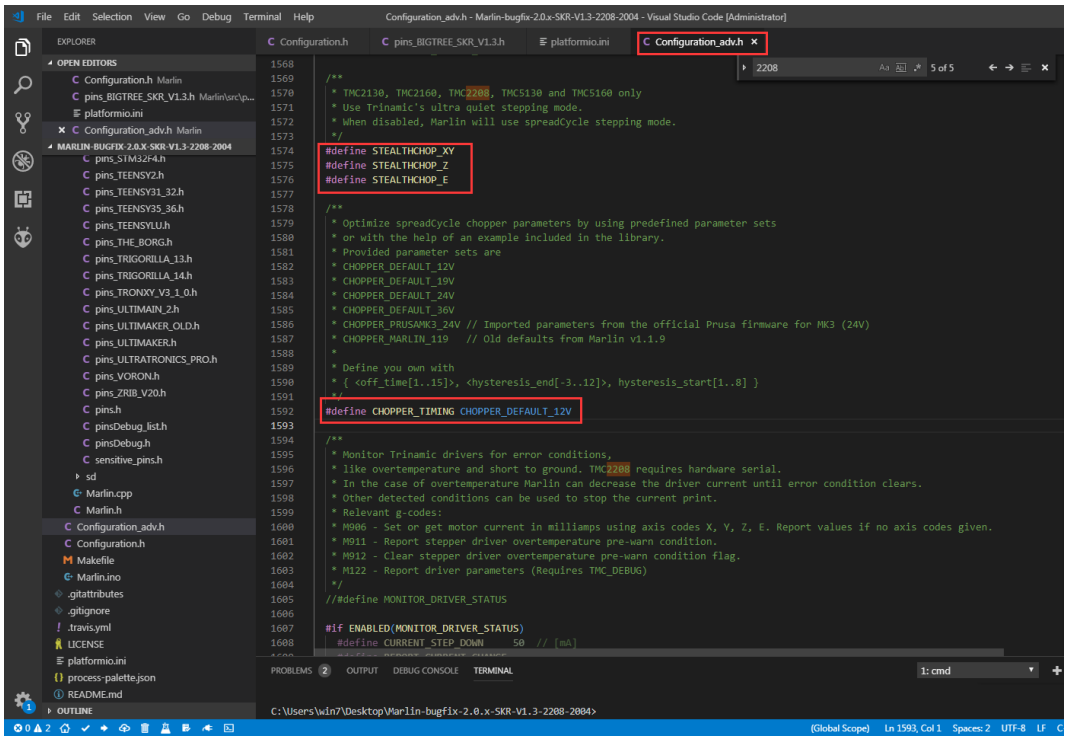

Pins_BIGTREE_SKR_V1.3.h file

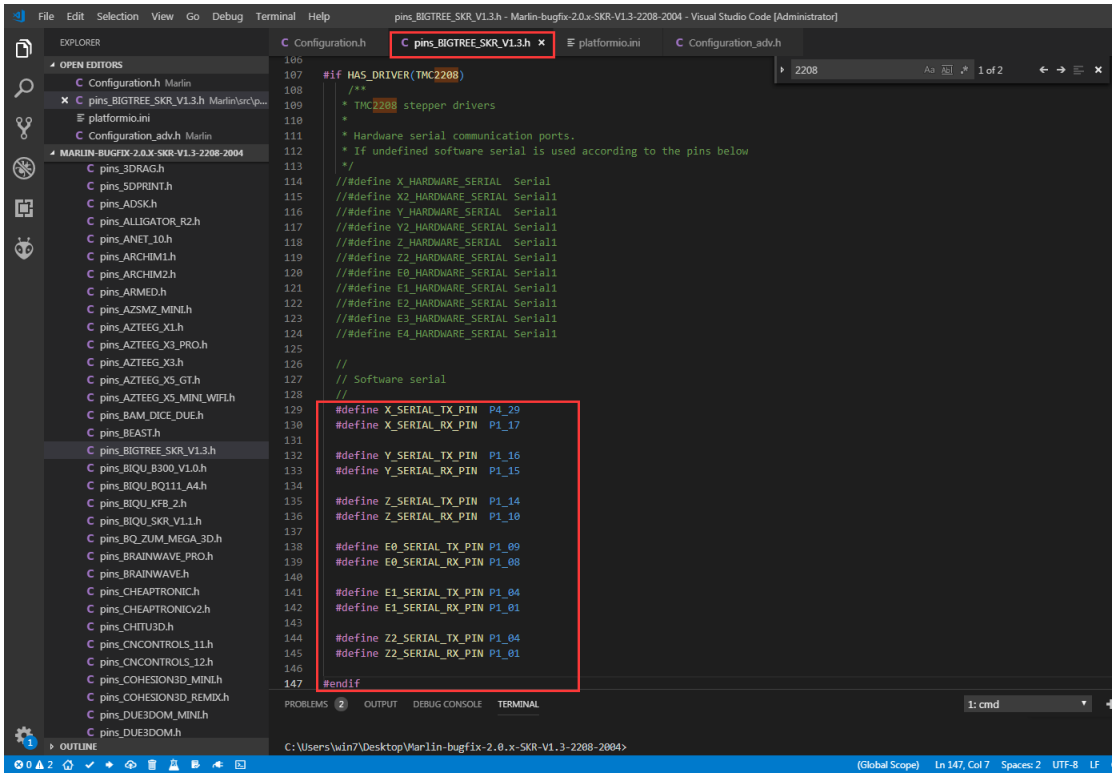

After the firmware is changed, burned the firmware and check whether the driver is correctly installed is detected.

	X	Y	Z	E0	
Enabled	true	true	true	true	
Set current	1000	1000	1000	1000	
RMS current	994	994	994	994	
MAX current	1402	1402	1402	1402	
Run current	17/31	17/31	17/31	17/31	
Hold current	11/31	11/31	11/31	11/31	
CS actual		11/31	11/31	11/31	11/31
PWM scale		13	13	13	13
vsense	0=.325	0=.325	0=.325	0=.325	
stealthChop	true	true	false	true	
msteps	4	4	4	4	
tstep	1048575	1048575	1048575	1048575	
pwm threshold		24	24	16	13
[mm/s]	102.95	102.95	3.09	30.41	
OT prewarn	false	false	false	false	
OT prewarn has been triggered	false	false	false	false	
off time		5	5	5	5
blank time	24	24	24	24	
hysteresis -end	2	2	2	2	
hysteresis -start	3	3	3	3	
Stallguard thrs					
DRVSTATUS	X	Y	Z	E0	
stst	X	X	X	X	
olb					
ola					
s2gb					
s2ga					
otpw					
ot					
157C					
150C					
143C					
120C					
s2vsa					
s2vsb					

Driver registers: X = 0xC0:0B:00:00
Y = 0xC0:0B:00:00
Z = 0xC0:0B:00:00
E0 = 0xC0:0B:00:00

Attention ：

1. When hardware chooses UART working mode, cautiously use soldering iron to prevent scalding hands. After treatment, carefully observe whether there is residual tin slag in the module. It must be cleaned up to prevent short circuit burning of the module.

2. Pay attention to the line sequence and IO port when wiring. If the wrong line is connected, the drive will not work.

3. When inserting drive into the main board, pay attention to see the direction of drive, can not insert backward, to prevent drive from burning.

4.Make sure to do a good job in heat dissipation (heat sink + heat dissipation fan) before driving to prevent abnormal operation of the drive.

If you encounter problems in use, welcome to contact us, we will be answer to you ASAP . If you have any good comments or suggestions on our products, please tell us , we will carefully consider your comments or Suggestions. Thank you for choosing BIGTREETECH products, thank you!